Product Bulletin

Product Bulletin:

Introduction to Data ONTAP 8.0 Cluster Network and Management Network Switches

Revision History

14 September 2009
9 May 2010
6 July 2010
13 September 2010
8 November 2010

Proprietary and confidential. Restricted to NetApp employees and channel partners, each of whom is under NDA obligations. This document may not be shared with customers without prior written permission from NetApp. © Copyright 2010 NetApp, Inc. All rights reserved.

This product bulletin informs NetApp sales and NetApp partners about new or changed NetApp® products or services.

1. Summary
2. What's New?
3. Sales and Customer-Ready Tools
4. System Requirements
5. Product Information
6. Regulatory Compliance
7. Warranty and Service
8. Additional Information

---

1. Summary

Support for NetApp FAS/V3200 and FAS/V6200 series has been added to Data ONTAP 8.0 Cluster-Mode.

NetApp is no longer offering Support Edge Services (SES) for the cluster and management switches. NetApp will resell Cisco SMARTnet service contracts. Support will be handled by Cisco. A byproduct of this change is that marketing part numbers for the cluster and management switches, 6-port expansion modules, and 1G SFPs have changed (see section 5). Also, switches will no longer be installed in NetApp cabinets at the factory. The factory will leave a space for the switches, and actual installation will occur at the customer site. The switches will be shipped from the distribution center in separate boxes.

Due to the change in part numbers, any current quotes must be re-quoted with the September Quote Tool.

The X1107A-R6 has been released in Data ONTAP® 8.0.1 as a cluster interconnect NIC and is now the preferred NIC for clustering. It is less expensive than the X1008A-R6 and it can be configured for SFP+ copper cables, which further reduces the cost of the system by eliminating optical SFPs on both the 10G cluster switch and the NIC.

Support for NetApp FAS2040 and DS4243 shelves has been added to Data ONTAP 8.0 Cluster-Mode.

With Data ONTAP 8.0 Cluster-Mode, NetApp requires purchase of cluster network and management network switches for all storage clusters. The Cisco Nexus 5010 (20-port 10GbE switch and optional 6-port expansion model) and the Cisco Nexus 5020 (40-port 10GbE switch) are available for the cluster network, and the Cisco

Catalyst 2960-24TT (24-port 10/100 Mb with two 1GbE uplink ports) is available for the management network. The cluster network and management network switches must be purchased through NetApp to make sure that the cluster is fully supported.

2. What's New?

All controllers except the FAS2040 must use two 10GbE NICs to connect to the cluster network. Port a on each NIC must be connected to the cluster network. Port b on each NIC may be used for client data access, except for the FAS/V6080 and FAS/V6070, which for maximum performance should use additional 10GbE NICs for client data access and leave port b unconnected.

FAS2040 connects into a cluster using onboard 1GbE ports. The first 8 ports of the Cisco Nexus 5010 and the first 16 ports of the Cisco Nexus 5020 can be either 1GbE or 10GbE, depending on the SFP that is used. NetApp has released a new 1GbE SFP to enable the FAS2040 to participate in clusters. All other platforms remain at 10GbE.

With the introduction of Data ONTAP 8.0 Cluster-Mode, NetApp provides integrated Ethernet switches for the cluster network and the management network. This NetApp engineered solution offers standard configurations based on approved switch firmware and NetApp switch configuration files. This solution, which is fully tested throughout the Data ONTAP 8.0 quality assurance process, offers greater supportability, leading to faster problem resolution.
The following figure shows the cluster network architecture. Each storage controller has a pair of 10GbE NICs, and each of these NICs connects to one of two redundantly deployed cluster network switches. Similarly, each storage controller has separate management connections to each of the redundantly deployed management network switches.

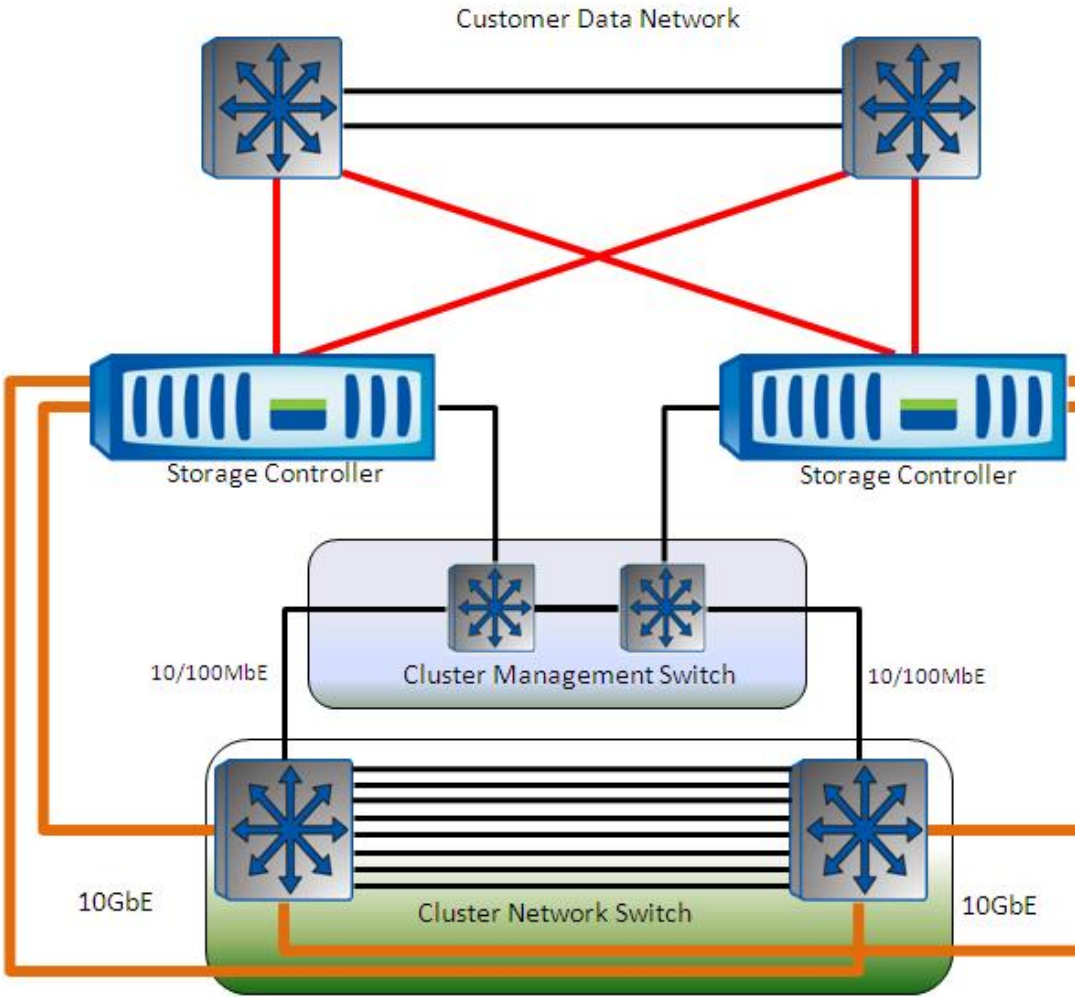

Note: Although NetApp resells the Cisco Nexus 5010 and 5020 for FCoE and Data Center Bridging (DCB) support, there are separate model numbers for the Data ONTAP 8.0 cluster network switches:

- X1962-R5-C
- X1963-R5-C

These model numbers are specific to the Data ONTAP 8.0 cluster network and **may not be sold or repurposed for any other usage**. Customers who are looking for Cisco Nexus switches for other usages outside of the cluster network architecture should consult **Product Bulletin FCoE Ecosystem Expansion** for correct ordering information.

3. Sales and Customer-Ready Tools (Training, SE, Customer Presentations, Datasheets, Sales Guides)

Sales and customer-ready tools for the cluster network and management network switches are incorporated as part of the Data ONTAP 8.0 Cluster-Mode collateral:

- **Data ONTAP 8.0 Cluster-Mode Systems**
- **Cluster-Mode Site Questionnaire**

4. System Requirements

A site questionnaire is available on the **NetApp Field Portal**. This questionnaire is required to make sure that the proper switch components and cable lengths are ordered.

The following table summarizes the supported cluster configurations. Complete compatibility information can be found on the **NetApp Support (NOW®) site**.

Function	Switch	Max Nodes	Configurable in NetApp Cabinet	Supported NICs
Cluster Network	Cisco NX-5010 X1962-R5-C	2–18	Yes	X1107A-R6, X1008A FAS2040 onboard 1
Cluster Network	Cisco NX-5020 X1963-R5-C	2–24	No	X1107A-R6, X1008A FAS2040 onboard 1
Management Network	Cisco Catalyst 2960-24TT X1965-R5-C	2–24	Yes	On boards ports only

Notes:

1. Currently the Cisco NX-5020 switch is not configurable in NetApp cabinets, including post sale.
2. If all nodes are 3040, 3070, or 6000 series, then the maximum allowable is 22 nodes.

5. Product Information

Customers who are creating new storage network clusters with Data ONTAP 8.0 Cluster-Mode are required to purchase from NetApp the appropriate cluster network switches and the management network switches.

Note: The Cisco Nexus switch part numbers listed in the following table are specific to the Data ONTAP 8.0 cluster network and **may not be sold or repurposed for any other usage**. Customers who are looking for Cisco Nexus switches for other usages outside of the Data ONTAP 8.0 cluster network should consult **Product Bulletin FCoE Ecosystem Expansion** for correct ordering information.

Part Number	Description	Discount Category Code
X1962-R5-C	NetApp Cluster Switch, 20 Pt, 10GbE, -C	C
X1963-R5-C	NetApp Cluster Switch, 40 Pt, 10GbE, -C	C
X1964-R5-C	6-Port Expansion, for X1962/X1963 -C	C
X1965-R5-C	NetApp Management Switch,24Pt,10/100MbE,-C	C
X5528A-R6	Cisco 2960 Cabinet Mounting Kit	C

The following accessory part numbers are also available to support configuration of the cluster network and management network switches.

Part Number	Description	Discount Category Code
X6578-R6	ClusSw RJ45,1GbE,SFP+, 1GBaseT	C
X6578-R6-C	ClusSw RJ45,1GbE,SFP+, 1GBaseT,-C	C
X-SFP-10G-SR-R6	Cisco,10GBase SR SFP+ Optic,R6	C
X-SFP-10G-SR-R6-C	Cisco,10GBase SR SFP+ Optic,-C,R6	C
X-SFP-H10GB-CU1M-R6	Cisco N50XX 10GBase Copper SFP+cable,1m,R6	C
X-SFP-H10GB-CU1M-R6-C	Cisco N50XX 10GBase Copper SFP+cable,1m,-C,R6	C
X-SFP-H10GB-CU3M-R6	Cisco N50XX 10GBase Copper SFP+cable,3m,R6	C
X-SFP-H10GB-CU3M-R6-C	Cisco N50XX 10GBase Copper SFP+cable,3m,-C,R6	C
X-SFP-H10GB-CU5M-R6	Cisco N50XX 10GBase Copper SFP+cable,5m,R6	C
X-SFP-H10GB-CU5M-R6-C	Cisco N50XX 10GBase Copper SFP+cable,5m,-C,R6	C
X-CAB-AC-R6	Cisco,C2960,Power Cord, North America,R6	C
X-CAB-ACA-R6	Cisco,C2960,Power Cord, Australian,R6	C
X-CAB-ACC-R6	Cisco,C2960,Power Cord China,R6	C
X-CAB-ACE-R6	Cisco,C2960,Power Cord Europe,R6	C
X-CAB-ACI-R6	Cisco,C2960,Power Cord-Italian,R6	C
X-CAB-ACR-R6	Cisco,C2960,Power Cord, Argentina,R6	C
X-CAB-ACS-R6	Cisco,C2960,Power Cord for Switzerland,R6	C
X-CAB-ACU-R6	Cisco,C2960,Power Cord UK,R6	C
X-CAB-JPN-R6	Cisco,C2960,Power Cord, Japan,R6	C
X-N5K-PAC-550W-R5	Cisco N5010 Power Supply,550W,R5	C
X-N5K-PAC-550W-R5-C	Cisco N5010 Power Supply,550W,-C,R5	C
X-N5K-C5010-FAN-R5	Cisco N5010 Fan Module,R5	C

X6560-R6-C	Cable,Ethernet,ACP,RJ45,CAT6,0.5m,-C,R6	C
X6560-R6	Cable,Ethernet,ACP,RJ45,CAT6,0.5m,R6	C
X6561-R6-C	Cable,Ethernet,ACP,RJ45,CAT6,2m,-C,R6	C
X6561-R6	Cable,Ethernet,ACP,RJ45,CAT6,2m,R6	C
X6562-R6-C	Cable,Ethernet,ACP,RJ45,CAT6,5m,-C,R6	C
X6562-R6	Cable,Ethernet,ACP,RJ45,CAT6,5m,R6	C
X6577-R6	Cable,Ethernet,ACP,RJ45,CAT6,30m,R6	C
X6577-R6-C	Cable,Ethernet,ACP,RJ45,CAT6,30m,-C,R6	C
X-N5010-ACC-CL-KIT-R5	Cisco, N50X0,Accessory Kit,Cluster,R5	C

Product Availability

Although all part numbers announced in this bulletin are available for quoting in the September 2010 Quote Tool release, quoting can be done only by authorized field people. Quotes can be generated only after the deal has been approved for Data ONTAP 8.0 Cluster-Mode by the deals desk. For preapproval and help with the quote, contact **DL-DADs-only@netapp.com**.

The cluster network and management network switches and associated accessory parts are available for shipment beginning in September 2010.

6. Regulatory Compliance

Products need to be validated against the NetApp Safety/EMI Regulatory Compliance List prior to order submission. This is required to make sure that products are being sold only in the countries in which NetApp has received regulatory compliance certification. This information can be found in the Field Portal under Compliance, Policies and Procedures or through the following links:

- **RoHS Compliance**
- **Safety/EMI Regulatory Compliance (XLS)**
- **WEEE Compliance**

7. Warranty and Service

NetApp resells Cisco SMARTnet services for the Cisco switches. The Cisco switches have a one-year return to factory warranty.

Part Number	Description	Discount Category Code
SVCVN-CON-OSE-N5010	Cisco Onsite 8x5x4hr,5010	S

SVCVN-CON-OS-N5010	Cisco Onsite 8x5xNBD,5010	S
SVCVN-CON-OSP-N5010	Cisco Onsite 24x7x4hr,5010	S
SVCVN-CON-PREM-N5010	Cisco Onsite 24x7x2hr,5010	S
SVCVN-CON-S2P-N5010	Cisco AR 24x7x2hr,5010	S
SVCVN-CON-SNTE-N5010	Cisco AR 8x5x4hr,5010	S
SVCVN-CON-SNT-N5020	Cisco AR 8x5xNBD,5010	S
SVCVN-CON-SNTP-N5010	Cisco AR 24x7x4hr,5010	S
SVCVN-CON-OSE-N5020	Cisco Onsite 8x5x4hr,5020	S
SVCVN-CON-OS-N5020	Cisco Onsite 8x5xNBD,5020	S
SVCVN-CON-OSP-N5020	Cisco Onsite 24x7x4hr,5020	S
SVCVN-CON-PREM-N5020	Cisco Onsite 24x7x2hr,5020	S
SVCVN-CON-S2P-N5020	Cisco AR 24x7x2hr,5020	S
SVCVN-CON-SNTE-N5020	Cisco AR 8x5x4hr,5020	S
SVCVN-CON-SNT-N5020	Cisco AR 8x5xNBD,5020	S
SVCVN-CON-SNTP-N5020	Cisco AR 24x7x4hr,5020	S
SVCVN-CON-OSE-N5600	Cisco Onsite 8x5x4hr,50XX 6-port 10GE	S
SVCVN-CON-OS-N5600	Cisco HW Svc,50XX 6Pt 10GE,Onsite 8x5xNBD	S
SVCVN-CON-OSP-N5600	Cisco Onsite 24x7x4hr,50XX 6-port 10GE	S
SVCVN-CON-PREM-N5600	Cisco Onsite 24x7x2hr,50XX 6-port 10GE	S
SVCVN-CON-S2P-N5600	Cisco AR 24x7x2hr,50XX 6-port 10GE	S
SVCVN-CON-SNTE-N5600	Cisco AR 8x5x4hr,50XX 6-port 10GE	S
SVCVN-CON-SNT-N5600	Cisco AR 8x5xNBD,50XX 6-port 10GE	S
SVCVN-CON-SNTP-N5600	Cisco AR 24x7x4hr,50XX 6-port 10GE	S
SVCVN-CON-OSE-C29602TT	HW Support,X1965,MgmtSwitch Onsite,8x5x4h	S
SVCVN-CON-OS-C29602TT	HW Support,X1965,MgmtSwitch Onsite,8x5xNBD	S
SVCVN-CON-OSP-C29602TT	HW Support,X1965,MgmtSwitch Onsite,24x7x4h	S

SVCVN-CON-PREM-C29602TT	HW Support,X1965,MgmtSwitch Onsite,24x7x2h	S
SVCVN-CON-S2P-C29602TT	HW Support,X1965,MgmtSwitch PartsOnly,24x7x2h	S
SVCVN-CON-SNTE-C29602TT	HW Support,X1965,MgmtSwitch PartsOnly,8x5x4h	S
SVCVN-CON-SNT-C29602TT	HW Support,X1965,MgmtSwitch PartsOnly,8x5xNBD	S
SVCVN-CON-SNTP-C29602TT	HW Support,X1965,MgmtSwitch PartsOnly,24x7x4h	S

8. Additional Information

Contact information: Please contact Paul Norman 408 822 6288 **pnorman@netapp.com** or your NetApp sales or channel partner representative with questions concerning this bulletin.

Additional part number change information can be accessed from the field portal by viewing **MPNC Marketing Part Number Change in Service and Part Numbers for Data ONTAP 8.0 Cluster-Mode Switches AUG10**

© 2010 NetApp | Subscriptions | Service and Support
495 E. Java Drive, Sunnyvale, CA 94089 USA